AERECO



BXC

Demand controlled exhaust unit for MEV

Humidity sensitive, presence detector and switch versions: modulates the airflow according to the various needs of the dwelling.

Airflow '+': possibility of setting the airflow levels at installation: up to + 50 m^3/h on the max. airflow.

Advanced special versions: CO_2, VOC, and remote control versions.

Silent working: silent auxiliary airflow activation.

Battery indicator: buzzer to indicate low battery level.

Pressure plug: allows pressure measurement to determine the airflow.

Easy to maintain: removable shutter case and front cover for easy cleaning.

A multifunctional exhaust unit to optimise indoor air quality and energy efficiency in MEV applications

The BXC incorporates all of the functions one could want in an air exhaust unit: various activation modes, such as humidity sensitive, presence detection, switch, and even CO_2 are available to adapt the ventilation to occupants' needs. The exhaust airflow is automatically modulated, in silent operation. The range of variable airflows can be set at installation to meet special needs, or to compensate for a lack of pressure; commissioning is also facilitated by the presence of a pressure plug, which allows measurement and easy calculation of the airflow.

Airflow '+': airflow can be set at time of installation (1)

The BXC lets you set the airflow according to the pressure available or to specific regulation requirements. The fixed shutter can be set to 6 positions, with an average step of +10 m^3/h (maximum = +50 m^3/h).

Pressure plug to help commissioning (2)

The built-in pressure plug makes it easy to measure the pressure using a manometer, then calcu-late airflow using a table in the installation instructions.

Advanced special versions (3)

The BXC was the first exhaust unit in the world offering the possibility of having built-in CO_2 and VOC sensors, for example. These innovations are especially well suited to applications in schools, offices, gymnasiums, mobile homes, etc. A remote control version is also available.

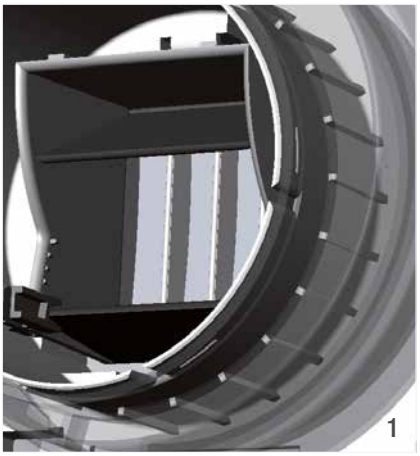
1

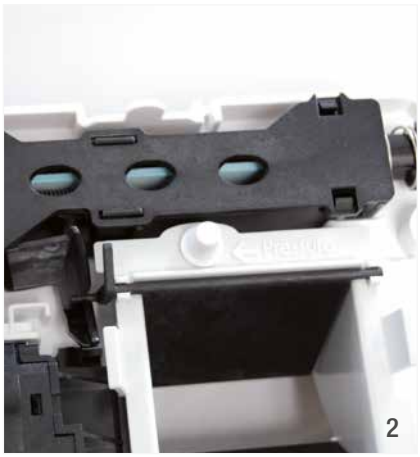
2



3



BXC Exhaust unit for MEV

		BXC h	BXC p	BXC hi	BXC hp	BXC co_2	BXC voc
Standard code (other versions available, please contact us.)		BXC211	BXC213	BXC212	BXC272	BXC401	BXC402
Airflow characteristics							
Humidity sensitive		■	-	■	■	-	-
Boost airflow		-	■	■	■	■	■
Boost airflow activated by switch		-	-	■	-	-	-
Boost airflow activated by presence detection		-	■	-	■	-	-
Other activation modes		-	-	-	-	CO_2 level	VOC level
Airflow @ 100 Pa (min.-max.) (1)	m^3/h	12-80	12-80	12-80	12-80	12-80	12-80
Airflow '+' - maximum available airflow @ 100 Pa (2)	m^3/h	130	130	130	130	130	130
Acoustics							
Sound power level Lw(A), 100 Pa, RH = 65 %, min. airflow '+' setting	dB(A)	28.3					
Dn,e,w (C, Ctr) Acoustic insulation, RH = 65 %, min. airflow '+' setting	dB	57 (-2 ; -4)	-	57 (-2 ; -4)	57 (-2 ; -4)	-	-
Power supply							
2 x 1.5 V AAA LR03 batteries (not supplied)		-	⊠	⊠	⊠	-	-
Buzzer (low battery charge)		-	■	■	■	-	-
12 VAC supply with specific transformer (ref. CAL261)		-	⊠	⊠	⊠	■ (CAL included)	■ (CAL included)
230 VAC supply with specific transformer (ref. CAL1228)		-	⊠	⊠	⊠	-	-
Characteristics							
Colour		white	white	white	white	white	white
Material (main)		PS / ABS	PS / ABS	PS / ABS	PS / ABS	PS / ABS	PS / ABS
Installation							
Round duct compatibility with integrated spigot	mm	ø100	ø100	ø100	ø100	ø100	ø100
Round duct compatibility with accessory spigot (3)	mm	ø125	ø125	ø125	ø125	ø125	ø125
Round duct compatibility - bracket version (min.-max.)	mm	ø85 - ø90	ø85 - ø90	ø85 - ø90	ø85 - ø90	ø85 - ø90	ø85 - ø90
Rectangular duct compatibility - bracket version (min.-max.)	mm	67 x 60 - 67 x 66	67 x 60 - 67 x 66	67 x 60 - 67 x 66	67 x 60 - 67 x 66	67 x 60 - 67 x 66	67 x 60 - 67 x 66
Other functions							
Pressure plug		■	■	■	■	■	■

■ standard / included - ⊠ compatible

Note: airflows given for a ø100 mm duct (1) Default setting. (2) Airflow '+' : the airflow can be increased from +10 m^3/h to + 50 m^3/h (6 available positions). This function can be used to adapt to lower pressures or to specific regulations imposing higher airflows. Standard is position 0 (minimum airflow = 12 m^3/h @ 100 Pa). (3) Delivered in specific versions or available as accessory (ref. AEA317). (4) Total of 18 configurations available for airflow setting for BFX version. Other versions available, please contact us.

Airflow characteristics

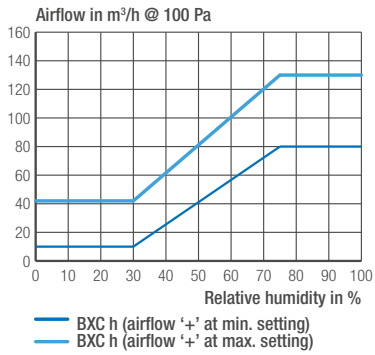

Dimensions in mm

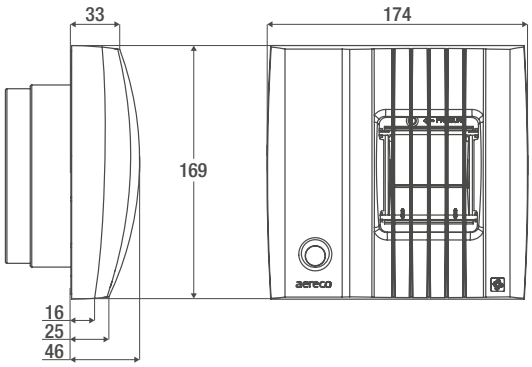

FLY475GB_v6 – Copyright Aereco – Images: Aereco – All data and pictures in this document are non contractual and are subject to change without prior notice.

AERECO
62 rue de Lamirault – Collégien – 77615 MARNE LA VALLEE CEDEX 3 – FRANCE
tel. +33 1 60 06 44 65 – fax +33 1 64 80 47 26 – www.aereco.com