DESIGN + ENGINEERING
GROHE GERMANY

96.736.231/ÄM 253569/05.23

www.grohe.com

Pure Freude an Wasser

GROHE

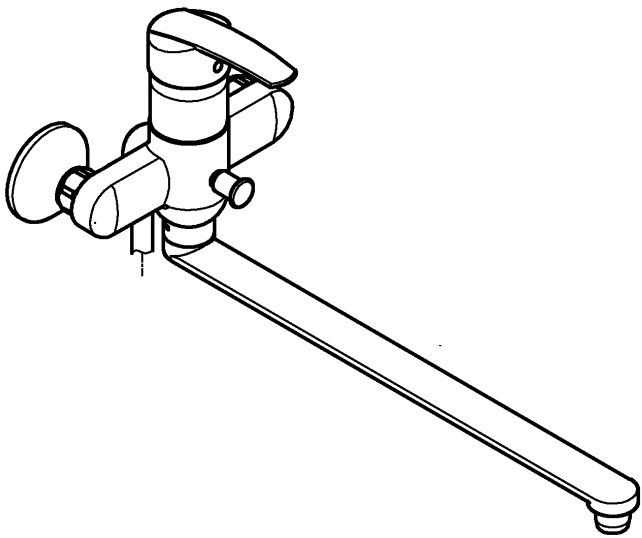



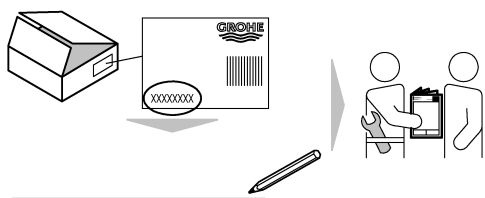

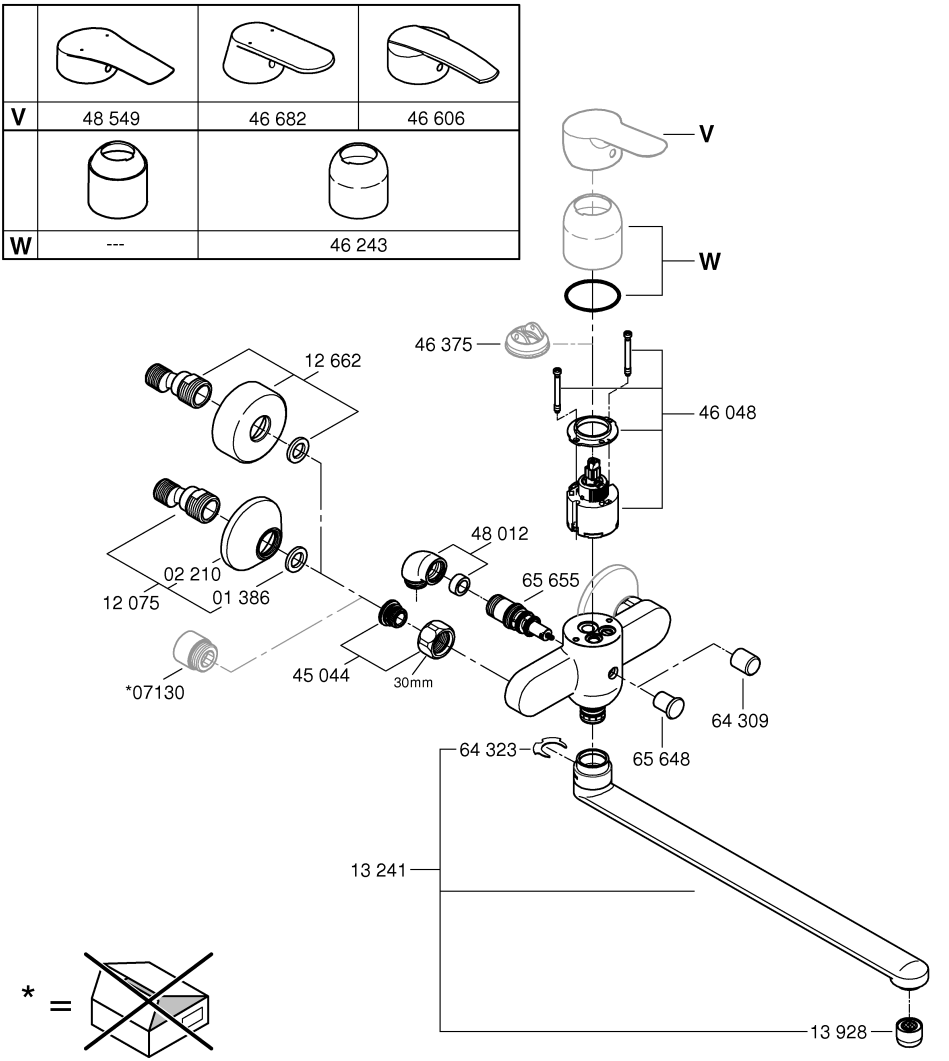
V
48 549
46 682
46 606
W
---
46 243
V
W
46 375
12 662
46 048
48 012
02 210
12 075
01 386
65 655
*07130
45 044
30mm
64 309
64 323
65 648
13 241
13 928
* =

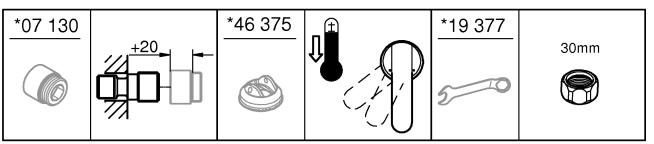
*07 130
+20
*46 375
*19 377
30mm



DIN EN 806

DIN EN 1717 | DIN 1988



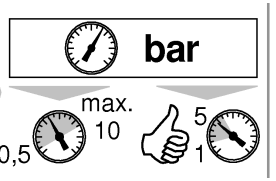

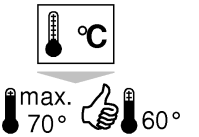

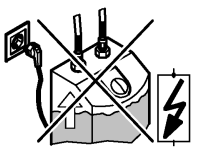

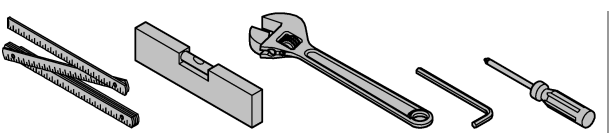



1

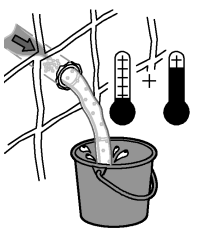

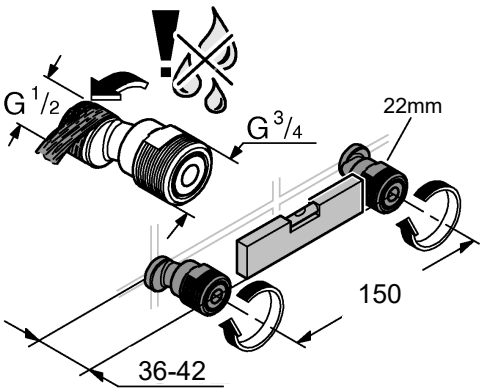

2

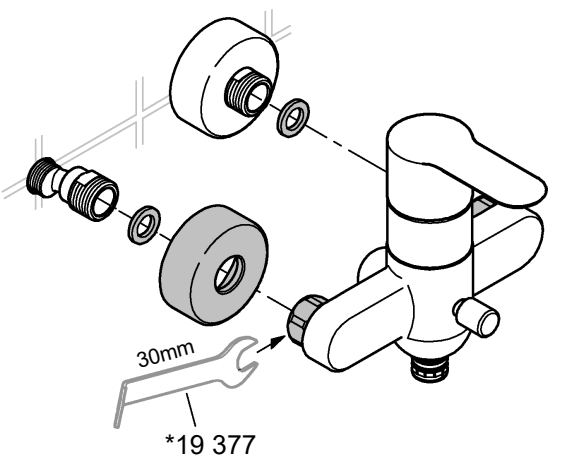

3

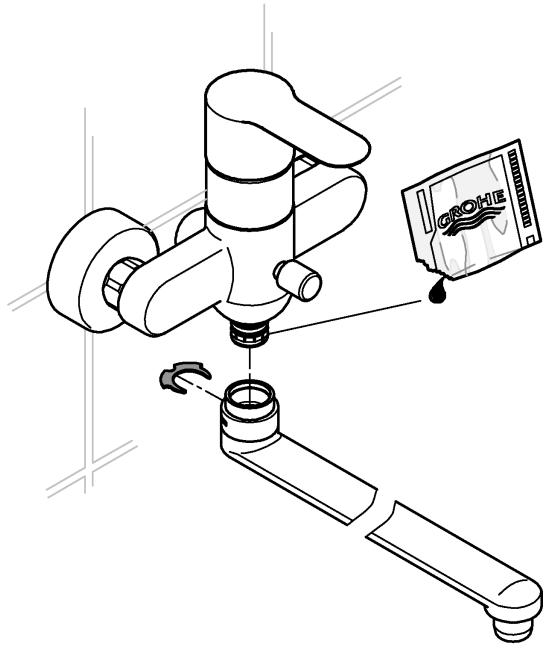

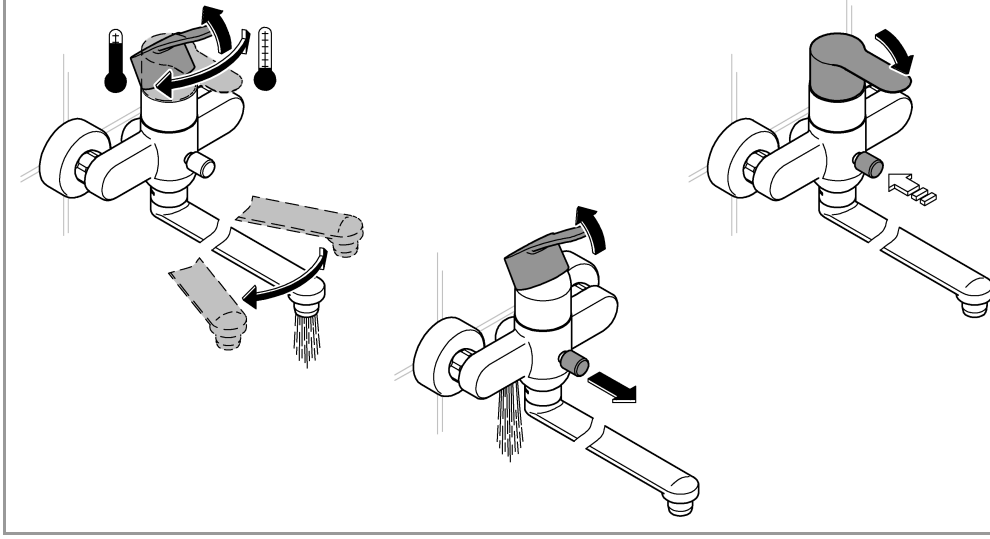

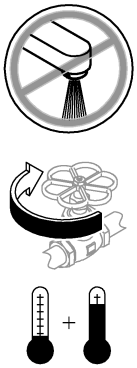

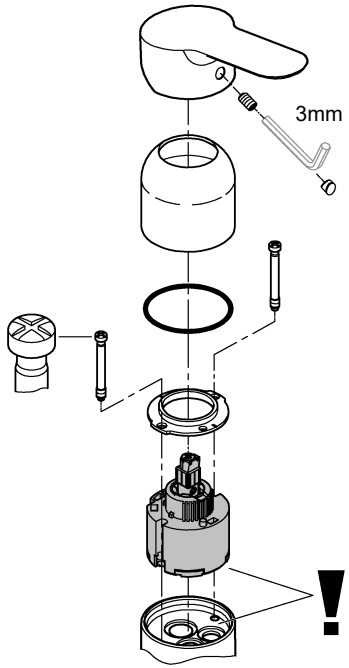
3mm
!

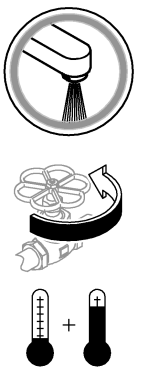



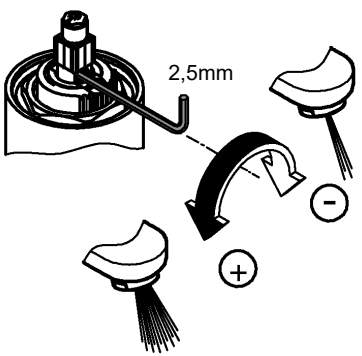
2,5mm
−
+